Rev	AWO #	Description	Date	Appr
-		RELEASED	12/10/04	
A		REDESIGNED	8/2/06	

APPROVED: _____

DATE: _____ TITLE: _____

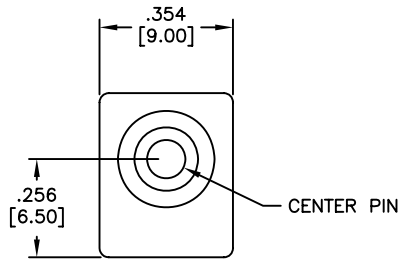

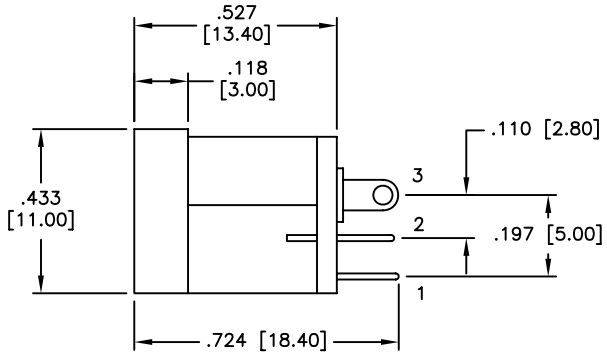

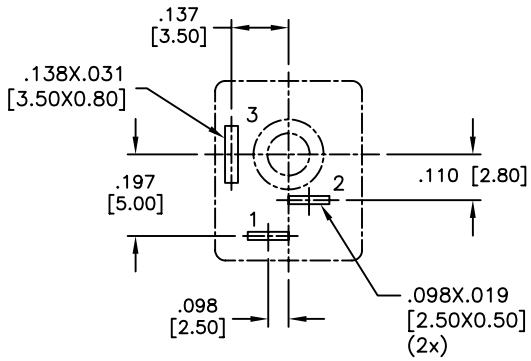

RECOMENDED
PCB LAYOUT
COMPONENT SIDE

PART NO.	CENTER PIN DIA.
ADC-010-1	.079 [2.00]
ADC-010-2	.098 [2.50]
ADC-010-5	.092 [2.35]

SCHEMATIC

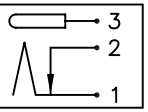

SPECIFICATIONS:

Material:

Insulator: PBT, Glass reinforced, rated UL 94V-0
Insulator color: Black
Center Pin: Brass, Nickel plated
Contacts: Copper Alloy

Plating:

Silver over Nickel underplate

Electrical:

Operating voltage: 12 VDC max.
Current rating: 1 Amp max.
Contact resistance: 30 mohms max. initial
Insulation resistance: 50 Mohms min.
Dielectric withstanding voltage: 250 VAC for 1 minute

Temperature Rating:

Operating temperature: -25°C to +70°C

Environmental:

Lead free, RoHS compliant
Recommended soldering temp: 235°C for 5 sec.

RoHS COMPLIANT

UNLESS OTHERWISE SPECIFIED
ALL DIMENSIONS ARE INCHES [MM]
TOLERANCES: EXCEPT AS NOTED

INCHES		HOLES	
.X	± .10	Ø.X	±.10
.XX	± .020	Ø.XX	±.015
.XXX	± .015	Ø.XXX	±.010

APPROVALS		DATE
DRAWN	SS	10/4/04
CHECKED		
APPROVED		

ADAM TECH
909 Rahway Avenue, Union, NJ 07083
Phone: 908-687-5000 Fax: 908-687-5710

TITLE: DC POWER JACK

SIZE	PART NO.	REV.
X	ADC-010-X	A

REF: | SCALE: NTS | SHEET 1 OF 1